# Telescopes – I. Optics & Mounts

Dave Kilkenny

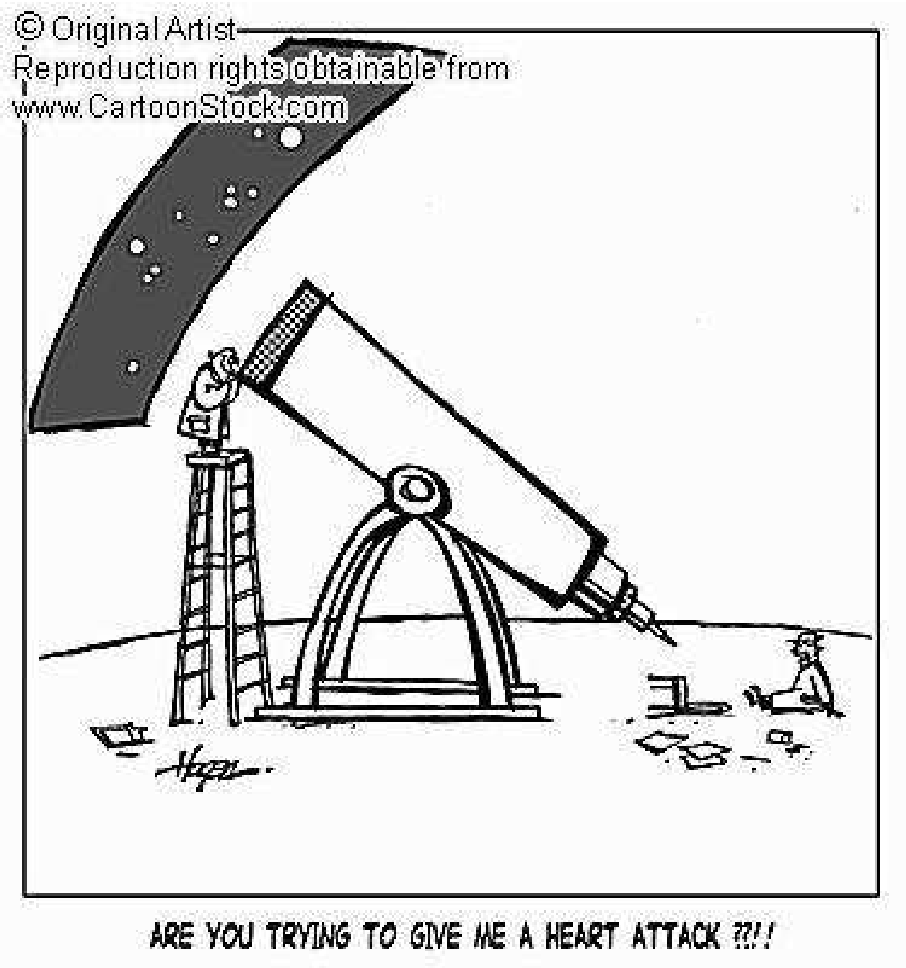

# Contents

# 1 Introduction

This lecture assumes knowledge of basic optics – reflection, refraction, dispersion, diffraction, interference and so on.

## 1.1 What is a telescope ?

A telescope – as far as astronomy is concerned is just a "light bucket". In almost all applications, we are not interested in magnification, but simply in collecting enough photons to measure. Usually, this means collecting enough photons to achieve a desired "signal/noise" ratio, always important in astronomy.

With larger telescopes, we increase the collecting area, so we increase the number of photons collected. This means that we can observe fainter objects, but we can also improve **resolution**. This can be **spatial resolution**, but it is often more important to get better **spectral resolution** (eg. by using **echelle spectrographs**) or better **time resolution** for "high-speed" photometry or spectroscopy. This means that one can take very short exposure (direct or spectroscopic) measures whilst retaining good signal/noise.

## 1.2 Atmospheric transmission

Astronomy developed as a "visual" region science – a natural result of the sensitivity range of our eyes. Radar development led to the discovery of extra-terrestrial radio sources (the Sun and the galactic centre) and the development of radio astronomy. The schematic of the transmission of the Earth's atmosphere show why infrared astronomy tended to be developed at high altitude observatories and the study of ultraviolet, X-ray and $\gamma$-ray astronomy was really restricted to high-altitude balloon observations and the advent of satellite astronomy (IUE, ROSAT, EUVE, IRAS, HST, ....).

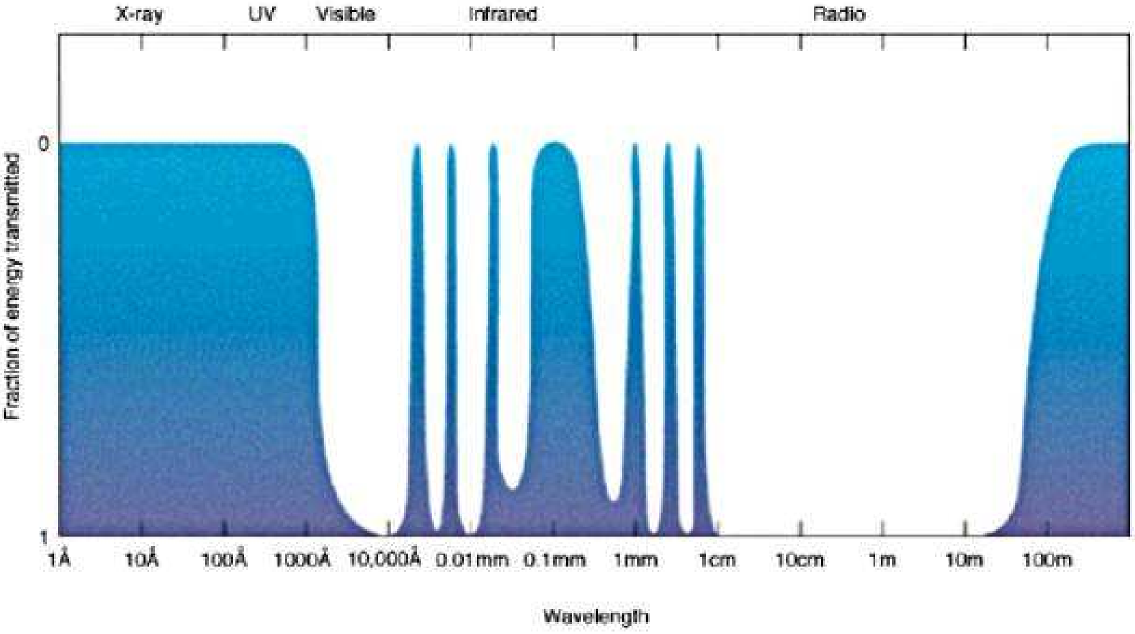

Figure 1: Schematic of the atmospheric transmission as a function of wavelength.

### 1.3 Units

The basic unit of length in physics is the metre – in the case of visible light, the units usually used are nanometres ($10^{-9}$m), so that visible light is about 400 – 700 nm.

However, in astronomy, many other units are used – partly as a matter of historical inertia, but mainly for reasons of convenience. We thus have, for example:

- **Optical – Ångstrom ($\AA$).** Traditional optical range unit ($10^{-10}$m)
- **Infrared – Micron ($\mu$m).** Near infrared $\sim 1 - 5\ \mu$m.
- **Radio – mm "microwave".**
- **Radio – cm.** eg. 21cm line of neutral Hydrogen.
- **Radio – Frequency/Hertz (Hz).** eg. 21cm = 1420 MHz.
- **X-ray, $\gamma$-ray – Energy (eV).** eg. 1 KeV = $2.4 \times 10^{17}$ Hz = $12.4 \times 10^{-10}$m

## 2 Aberrations

The history of telescope development and indeed much of modern telescope design is substantially affected by optical aberrations and trying to minimise them.

### 2.1 Chromatic aberration

**Chromatic aberration** occurs in lenses (not mirrors) because blue light is refracted more than red, so the focus for blue light is slightly closer to the lens than for red light.

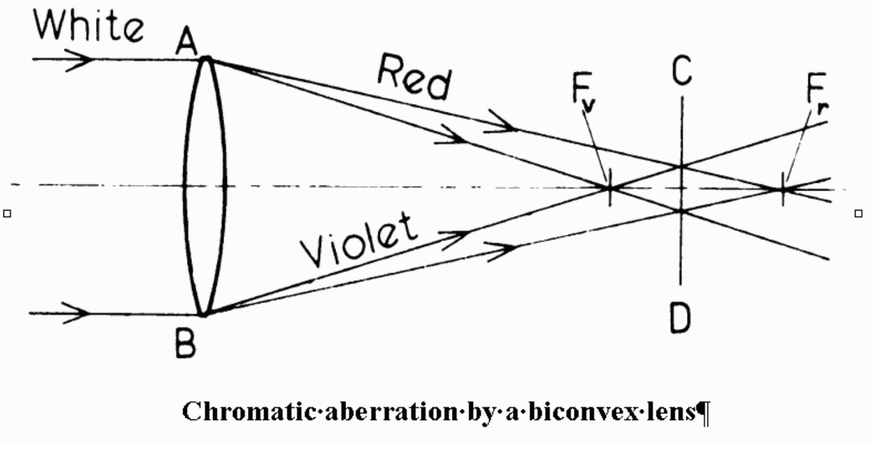

**Chromatic·aberration·by·a·biconvex·lens¶**

Figure 2:

Chromatic aberration can be corrected using (for example) two different kinds of glass – with different refractive indices – to form an **achromatic doublet**.

However, even if we work with reflecting surfaces (or monochromatic light) we encounter other aberrations.

In elementary geometrical optics, it is customary to consider (for example) the formation of images by a lens by considering light rays very close to the optical axis (**paraxial rays**) and making the approximations $sin\ \theta = \theta; cos\ \theta = 1$. This results in **first order** or **Gaussian** theory, where optical elements are essentially perfect, and gives, for example, the well-known lens equation and so on.

One way of approaching reality is to look at a McClaurin expansion of the sine of an angle:

$$sin\ \theta \ = \ \theta \ - \ \frac{\theta^3}{3!} \ + \ \frac{\theta^5}{5!} \ - \ \frac{\theta^7}{7!} \ - \ ........$$

It is easy to see from the table below that inclusion of only the second term on the right-hand side of the equation will result in a quite close fit to the "exact" result. Use of the $\theta^3$ term results in **third order theory** and enables determination of the **Seidel aberrations.**

Table 1: Values of sin $\theta$ and the first three expansion terms.

| $\theta$ | sin $\theta$ | $\theta$ | $\theta^3/3!$ | $\theta^5/5!$ |
|---|---|---|---|---|
| 10° | 0.17365 | 0.17453 | 0.00089 | 0.00001 |
| 20° | 0.34202 | 0.34907 | 0.00709 | 0.00004 |
| 30° | 0.50000 | 0.52360 | 0.02392 | 0.00033 |
| 40° | 0.64279 | 0.69813 | 0.05671 | 0.00138 |

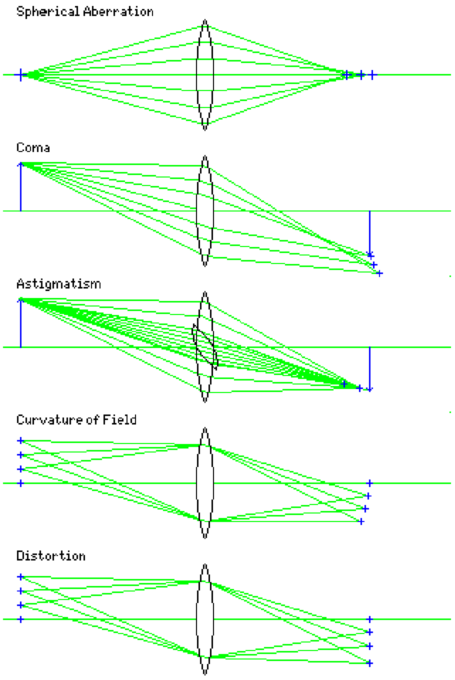

Figure 3: The five Seidel aberrations.

### 2.2 Spherical aberration

Spherical surfaces are easy to figure, but light striking the outer part of a spherical lens – or mirror – focuses closer to the lens/mirror than light from the inner part. For a **lens**, spherical aberration can be removed by designing an achromatic doublet so that the spherical aberrations cancel. For a **mirror**, it is common practice to use paraboloidal rather than spherical surfaces.

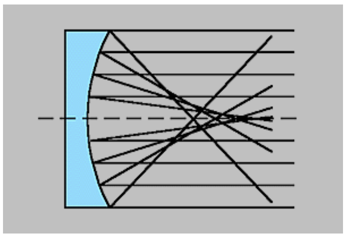

Figure 4: Spherical aberration effect in a spherical mirror.

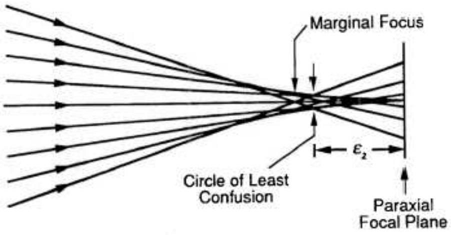

Figure 5: Spherical aberration.

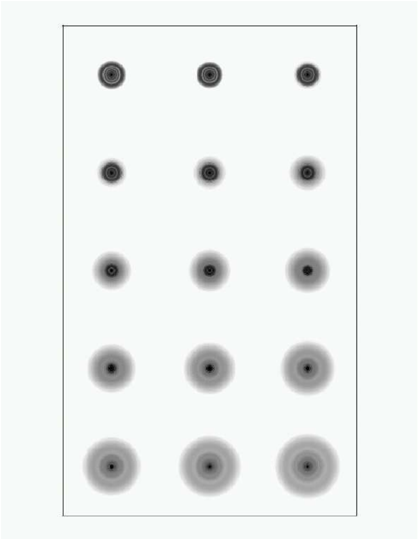

Figure 6: Simulation of the effect of spherical aberration on the image, passing through focus.

The **Southern African Large Telescope (SALT)** has 91 separate mirrors of approximately 1m diameter each. These are all figured with spherical surfaces because:

- spherical is easier and therefore somewhat cheaper – important when there are 91 of then (97, including spares).
- The mirrors have to be integrated into a single surface – adjusted to form a single optical element – this is considerably easier with a spherical surface than any other conic section.
- Individual mirrors can be used anywhere on the surface of the sphere. Any other surface would require that each mirror would have a unique location and could not be used elsewhere on the surface. (the Keck telescopes actually do this – but it's hard).
- With a spherical surface, "spare" mirrors can be used anywhere on the surface. Mirrors can be replaced by freshly aluminised mirrors on a planned and regular basis. This would not be possible with an aspheric surface.

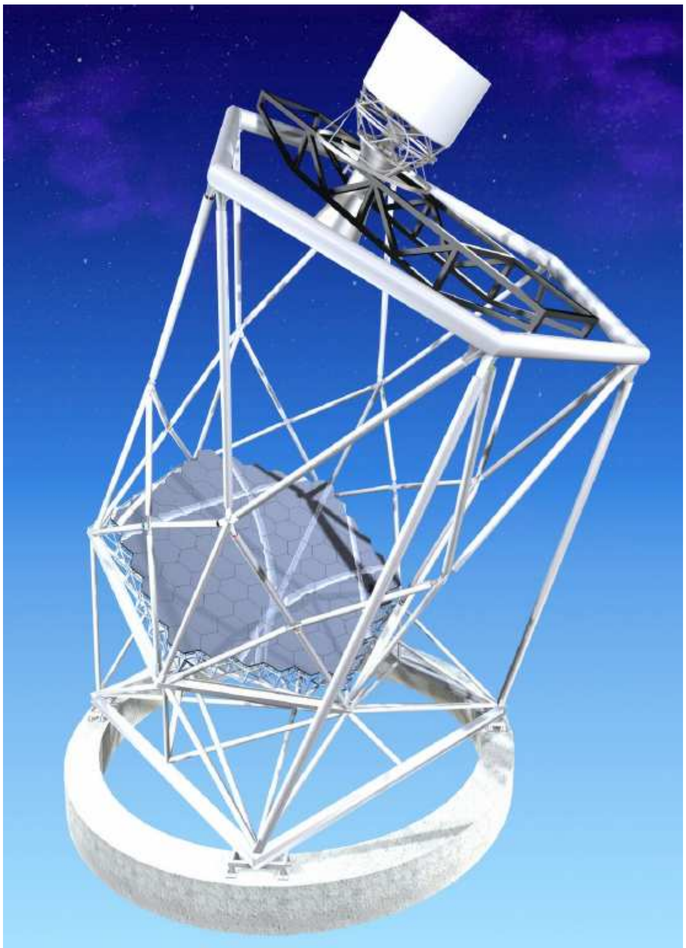

Figure 7: Simulation of SALT. Notice the "tracker beam" and alt-az mount.

As we have already seen, a major drawback of a spherical lens or mirror is spherical aberration. The primary mirror of SALT will therefore have this aberration which will be corrected by a complex and well-designed lens system – the **spherical aberration corrector (SAC)**

### 2.3 Coma

Images formed from **off–axis** rays, are distorted (quite badly for paraboloids !). If we think of images from successively larger radius circular strips of the mirror, these combine to form an elongated image ("comet-like" = coma or comatic images). The further from the optical axis, the worse the coma gets.

Field correcting lenses can be used to reduce the effect of coma.

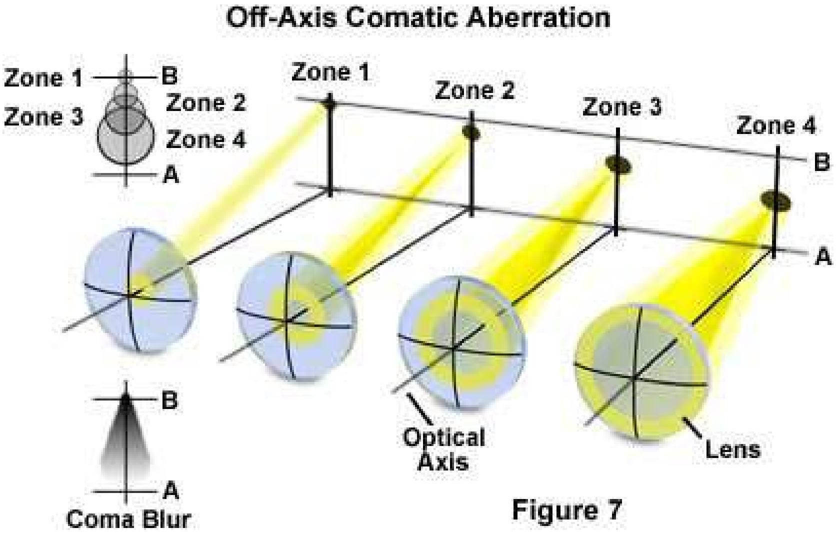

Figure 8: Schematic illustrating coma.

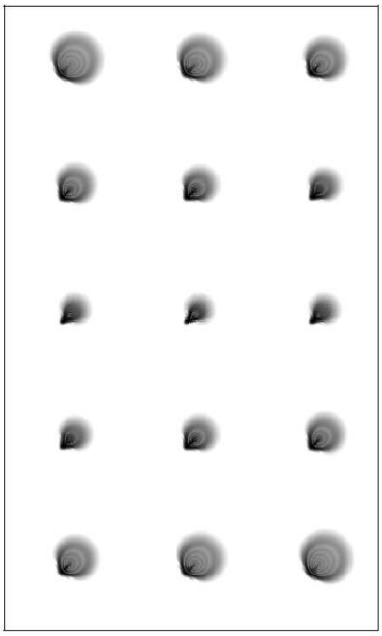

Figure 9: Simulation of the effect of coma on the image, passing through focus.

### 2.4 Oblique astigmatism

The term **“oblique” astigmatism** is used to distinguish astigmatism in a lens or mirror, other than that which is produced intentionally by a cylindrical surface or, for example, in the human eye (most correcting spectacles will include a correction for astigmatism). Oblique astigmatism (like coma) is an off-axis aberration and all uncorrected lenses and mirrors will suffer from it.

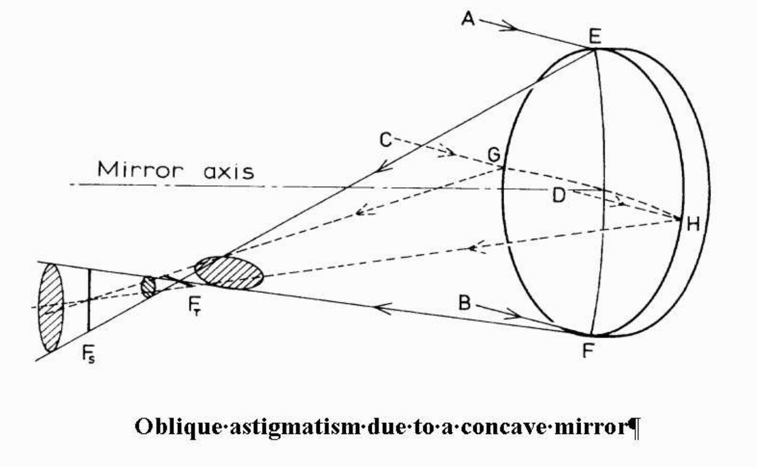

**Oblique·astigmatism·due·to·a·concave·mirror¶**

Figure 10:

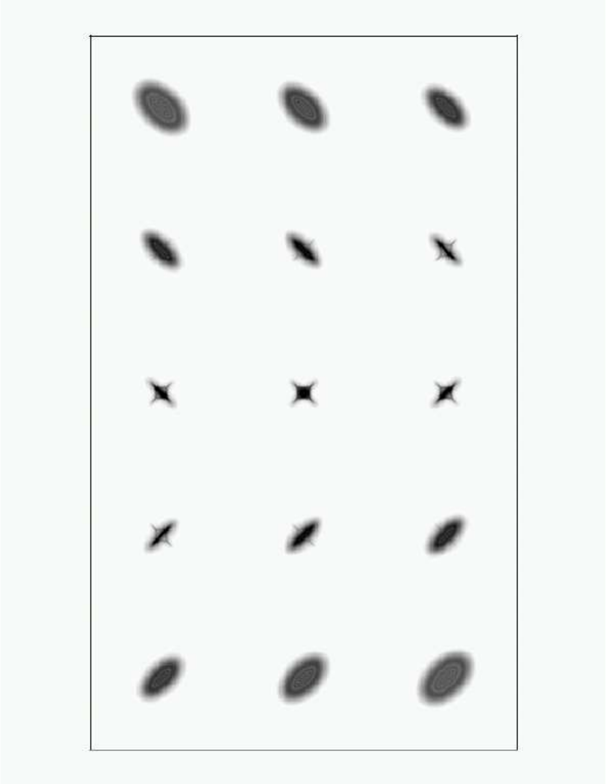

Figure 11: Simulation of the effect of oblique astigmatism on the image, passing through focus.

### 2.5 Field curvature

In the absence of spherical aberration, coma and astigmatism, the focal surface of a spherical mirror or lens will lie on a paraboloidal surface called the **Petzval surface**. If astigmatism is present, the curvature will be more severe than the Petzval surface.

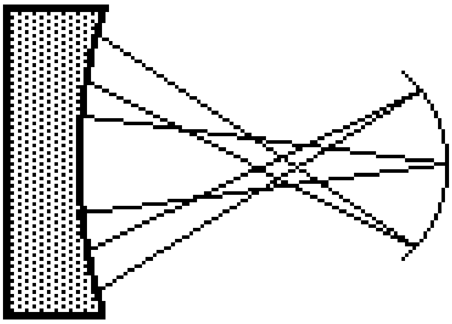

Figure 12: Field curvature.

In the days of glass photographic plates, it was possible to force a plate to curve into the shape of the curved focal surface. With modern solid state detectors, a telescope might need expensive "field-flattening" optics to operate over a "wide" field.

### 2.6 Distortion

Even if it is possible to get rid of "point" source aberrations – the on-axis spherical aberration and the off-axis coma and astigmatism – *and* the field curvature, an optical system can still suffer from distortion. This is effectively a slight variation in magnification across the field and results in the well-known **"barrel"** and **"pincushion"** distortions – so-called because they look nothing like either a barrel or a pincushion.

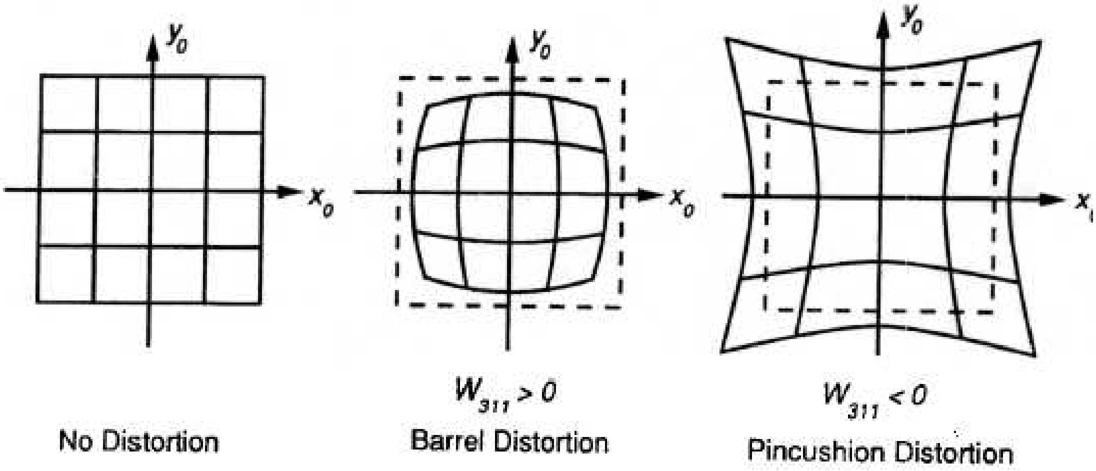

No Distortion

Barrel Distortion

Pincushion Distortion

Figure 13: Field distortion.

# 3 Telescope basics

## 3.1 Speed

The brightness of an image is proportional to the light collecting area, so:

$$B \ \alpha \ a^2$$

where a is the **diameter** of the telescope aperture

But for an extended object (such as a galaxy) the more the image is spread out by the optics (the **"scale"** of the telescope), the less will be the brightness in energy/unit area on the detector. The spread is proportional to the focal length of the telescope, so for **extended sources**:

$$B \ \alpha \ (a/f)^2$$

Amongst the parameters defining a telescope are thus the focal length (f) and aperture (a), or the:

$$\textbf{focal ratio} = \text{f/a} = \frac{\text{focal length}}{\text{aperture}}$$

The focal ratio is sometimes called the **speed** or **f-ratio** of the telescope. A small f-ratio means faster speed because of a brighter image (for an extended source). It thus means shorter exposure times to measure a certain brightness of object but it also means that the scale of the telescope is smaller.

## 3.2 Scale

The **scale** of a telescope is the way in which angular size in the sky translates to linear size at the focus of the telescope – which would normally be on the detector. Scale is usually expressed in arcseconds/mm.

Simple geometry gives:

$$\text{scale, s} = 206265/\text{f}$$

where s is in arcsec/mm, and the focal length of the telescope, f, is in mm. (and there are $\sim$ 206265 arcseconds in a radian).

Example: at the prime focus of a 4m telescope with an f/3 primary,

$$\text{focal length, f} = \text{f ratio} \times \text{aperture} = 12\text{m} = 12000\text{mm}$$

so,

$$\text{scale} = 206265/12000 = 17.2 \text{ arcsec/mm}$$

### 3.3 Light-gathering power

The **Light-gathering power** of a telescope is simply its ability to collect light and is therefore proportional to the collecting surface area, or $a^2$, if $a$ is the aperture (usually by "aperture" we mean the diameter of the primary mirror).

For **point sources** (such as stars), *ideally* the image is concentrated into the same area irrespective of focal length (or f-ratio) so "speed" depends only on aperture.

If we compare the SAAO 1m telescope to the human eye (with a maximum aperture $\sim$ 8mm), the relative light gathering power will be $(1000/8)^2$, or a factor of nearly 16000.

### 3.4 Resolving power

Light passing through a circular aperture suffers **Fresnel diffraction**, so that even an infinitely small point source will show a somewhat diffuse image with an interference pattern – the diffraction pattern.

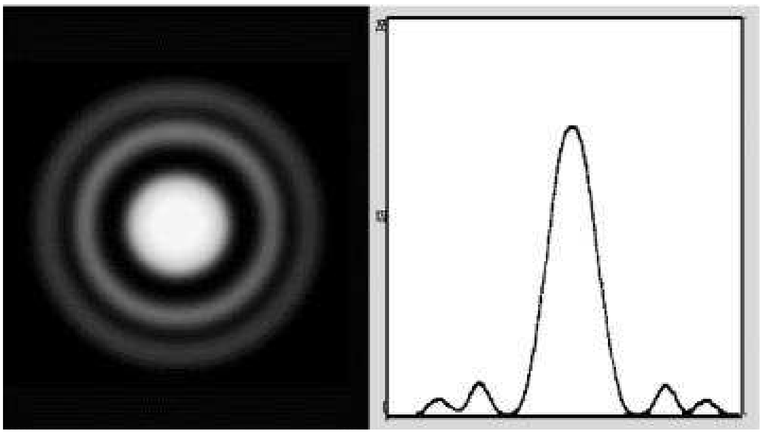

Figure 14: Diffraction pattern produced by a circular aperture. The central spot is the **Airy disk**.

In astronomy, the radius of the first minimum in the diffraction pattern is referred to as the **Airy disk**. The angular radius is given by:

$$\theta \ = \ 1.22 \, \frac{\lambda}{a}$$

Actually *sin* $\theta$, but we can write *sin* $\theta = \theta$ because the angles are very small. And the linear radius is:

$$\theta \ = \ 1.22 \, f \, \frac{\lambda}{a}$$

where:
$f$ = focal length
$a$ = aperture (diameter of the objective)
$\lambda$ = wavelength

Example: For white light ($\lambda \sim 5600\mathring{A} = 5.6 \times 10^{-5}$cm, given a lens of diameter 4cm and a focal lenght of 30cm, the Airy disc has an angular radius:

$$1.22 \times \frac{5.6 \times 10^{-5}}{4} = 1.71 \times 10^{-5} \text{ radians} = 3.5 \text{ arcsec}$$

and a linear size of:

$$30 \times 1.71 \times 10^{-5} = 5.1 \times 10^{-4} \text{ cm.}$$

For a point source (star), the central disk is thus $\sim$ 0.01mm in diameter.

Two sources are said to be resolved (**Rayleigh criterion**) when the peak of the central maximum of one falls on the first dark ring of the other.

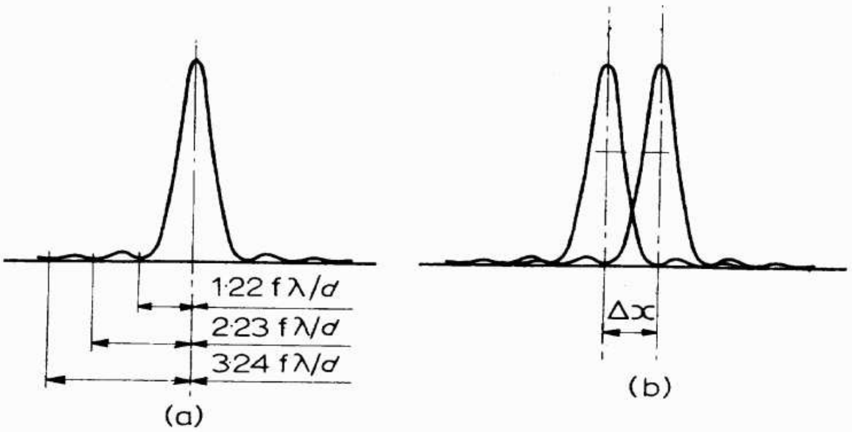

**(a)·Airy·disk;··(b)·Diffraction·limit·to·resolution¶**

Figure 15:

The *minimum* resolution of a telescope in the optical (say $5600\mathring{A}$) is then:

$$\theta_{min} = 1.22 \frac{\lambda}{a} \text{ (radians)} = \frac{1.22 \times 206265 \times 5.6 \times 10^{-5}}{a\ (cm)} = \frac{14.1}{a(cm)} \text{ (arcsec)}$$

This is the **diffraction-limited resolution** – which is generally unattainable due to atmospheric effects (The Hubble Space Telescope is an obvious exception to this).

| | | |
|---|---|---|
| Examples: | SAAO 1m telescope | $\theta \sim 0.14$ arcsec |
| | Human eye | $\theta \sim 50 - 60$ arcsec |
| | Jodrell Bank 75m | $\theta \sim 9$ arcsec (at $\lambda \sim 20$cm) |

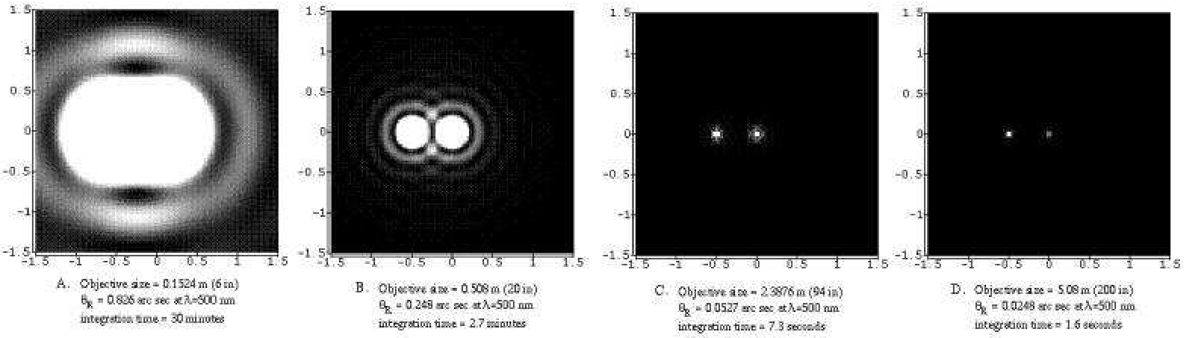

A. Objective size = 0.1524 m (6 in) $\theta_R$ = 0.826 arc sec at $\lambda$=500 nm integration time = 30 minutes

B. Objective size = 0.508 m (20 in) $\theta_R$ = 0.248 arc sec at $\lambda$=500 nm integration time = 2.7 minutes

C. Objective size = 2.3876 m (94 in) $\theta_R$ = 0.0527 arc sec at $\lambda$=500 nm integration time = 7.3 seconds

D. Objective size = 5.08 m (200 in) $\theta_R$ = 0.0248 arc sec at $\lambda$=500 nm integration time = 1.6 seconds

Figure 16: Demonstration of Airy disk/difraction-limited resolution with various sizes of objective/primary mirror. From left – 13 cm, 50 cm, 2.4m and 5m.

A couple of other image effects are worth noting here:

- Images of bright stars will often show diffraction "spikes" (see figure) from the "spider" which support the secondary mirror.
- Bright images on photographic plates often show halos due to **halation** – internal reflection of scattered light within the (photographic) glass plate.

Figure 17: Optical effects from bright images – diffraction and halation.

## 3.5 Seeing

In the previously given examples, we have seen that a small aperture (4 cm) will result in diffraction-limited resolution of several arcseconds, whereas for even a modest-sized 1m telescope, this figure is near to 0.1 arcsecond. Since the effects of the atmosphere tend to degrade images by amounts of the order of an arcsecond, diffraction-limited resoltion is rarely attained by earth-based telescopes - at least in the optical. Radio telescopes are usually diffraction-limited because they operate at so much longer wavelenghts.

Light entering the atmosphere travels through increasingly denser, higher pressure air which, in the lower few kilometers of the atmosphere, also increases in temperature. Since refractive index is a function of density and temperature for a given wavelength, the refractive index increases nearer the ground. This effect is systematic and therefore essentially predictable. However, the atmosphere also contains random and unpredictable turbulent and thermal variations which introduce *lateral* variations in refractive index on a timescale up to 100 Hz.

These variations distort the plane wavefront which arrives above the atmosphere and can produce the same effect as transient lenses and prisms – refraction, diffraction and dispersion. The most common of these distortions cause "ripples" in the refractive index which are comparable to the telescope aperture and cause brightness and colour **scintillation** of star images – what is seen as "twinkling" of the star by the naked eye.

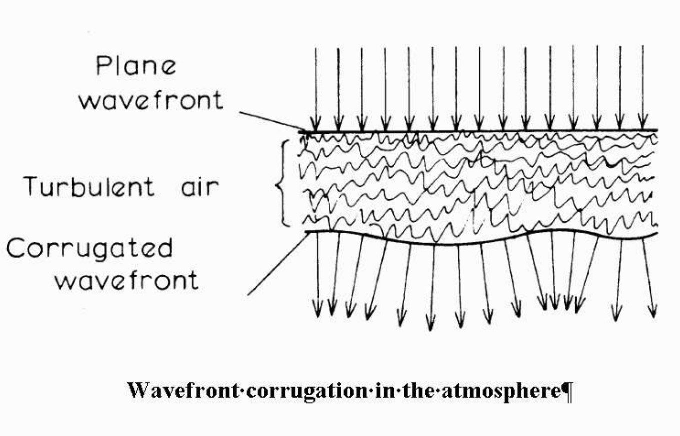

Figure 18:

The distortion of a plane wave by the effects described above – the scintillation of the image of a point source such as a star – shows, on a very short time-scale ($\sim$ 100 Hz) a pattern of "speckles" in which the speckles are of the order of the Airy disk in size. A longer exposure adds all these speckles into a much larger image than the diffraction-limited image and this is usually called the **seeing disk**.

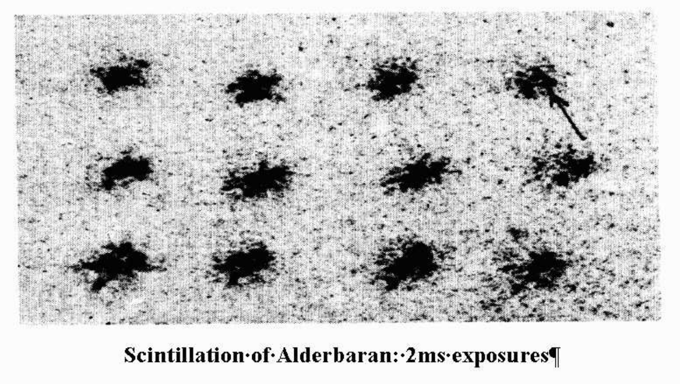

Figure 19: Repeated short (2 millisecond) exposures of Aldebaran. The speck at the head of the arrow is roughly the size of the diffraction-limited image.

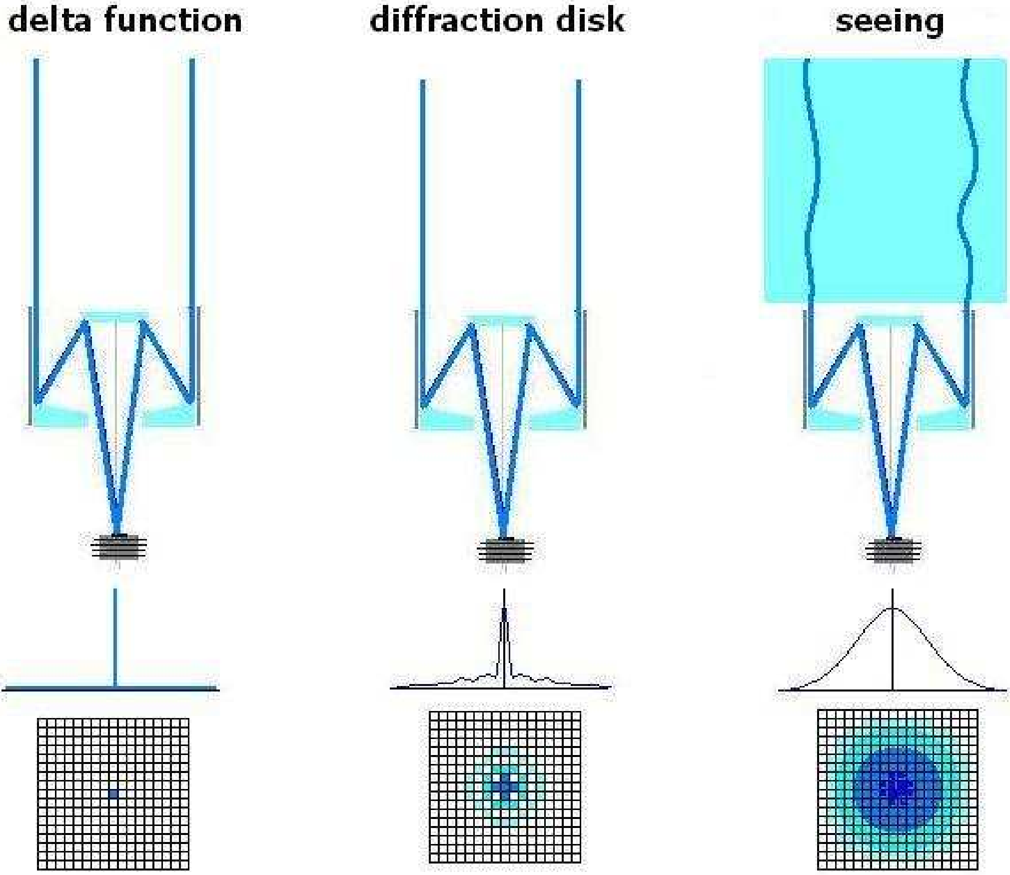

Figure 20: Schematic showing the effects of diffraction and seeing on stellar images.

## 4 Telescope configurations

We use telescopes because they give us:

- Light collecting power (light “bucket”).
- The use of modern detectors (including even the photographic plate) allow us to store or “integrate” photons for many minutes.
- The use of larger apertures gives us better resolving power.

Recall that for many purposes, magnification is unimportant – stars are effectively point sources, so magnifying them just magnifies the seeing disk. Telescopes give us the ability to **resolve** – spatial resolution, spectral resolution and time resolution.

### 4.1 Refracting telescope

The earliest telescopes (eg. of Galileo, 1609; Kepler 1610) used lenses and are called **refracting telescopes** or **refractors**. The text-book arrangement for a simple refractor is shown in the figure.

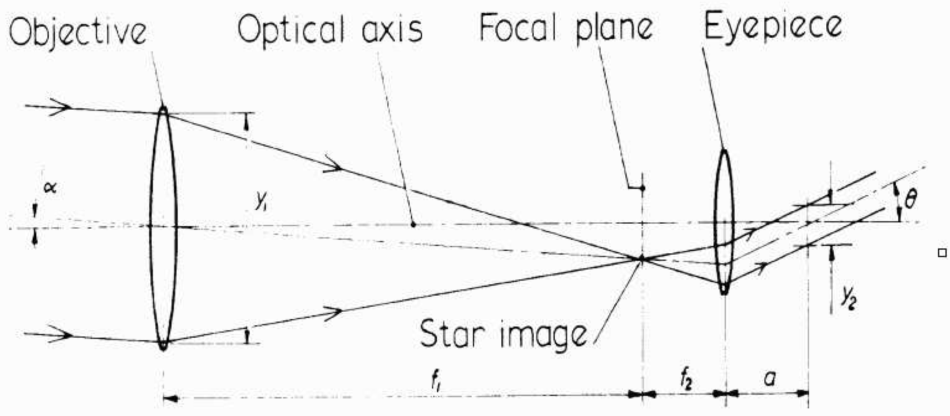

**Ray·path·for·a·simple·refracting·telescope¶**

Figure 21:

This arrangement is called **afocal** – both object and image are infinitely distant. The lenses are **confocal** – separated by the sum of their focal lengths. The magnifying power of such a set-up is:

$$\text{magnification} = \frac{f_1}{f_2} = \frac{tan\ \theta}{tan\ \alpha} = \frac{y_1}{y_2}$$

Aberrations in such a simple arrangement would be unpleasant. Light losses would occur at the four surfaces and in the two lenses.

Refractors generally have long focal lengths ( = good scale) and were good for astrometry. However, there are several drawbacks:

- It is difficult to make large optically accurate lenses.
- It is difficult to support large lenses adequately at the edges, and such lenses are quite thick in the middle (and so, very heavy).
- Chromatic aberration is a problem in a single lens.
- Glass absorbs light – especially in the ultraviolet.

Refractors also tend to be rather long for their aperture, and therefore need relatively large domes. The 40-inch (1m) refractor of the Yerkes Observatory was the largest ever built.

Figure 22: The Yerkes 40-inch (1m) refractor. Big, innit ?

On the up side, refractors are generally mounted in a sealed tube which keeps the interior surface clean. They also tend to be rugged and stable.

**Reflecting telescopes** or **reflectors** use mirrors as the optical elements because they:

- are easier to figure accurately (to better than $\lambda$);
- they only need to be figured on one surface, not two;
- can be supported more evenly and satisfactorily (including "active" optics;
- can be given high reflectivity, so light losses are small;
- can be made from lower quality glass (in the sense that defects are not important) but must generally be made of low expansion glass (eg. "Pyrex", "Zerodur", "Astrositall").

Because modern telescopes are large, the size excludes lens or **dioptric** systems and requires mirror or **catoptric** systems, or combinations of mirrors and lenses **catadioptric systems**. Some systems are described below.

### 4.2 Prime focus and Newtonian reflectors

A **prime focus** system has essentially a single element – the primary mirror. A **Newtonian** system has a simple "flat" to move the focus out to one side of the telescope. The paraboloidal primary avoids spherical aberration. The first reflecting telescope was designed by Newton in 1670.

These systems can be quite fast - typically around f/5 or so - useful for imaging.

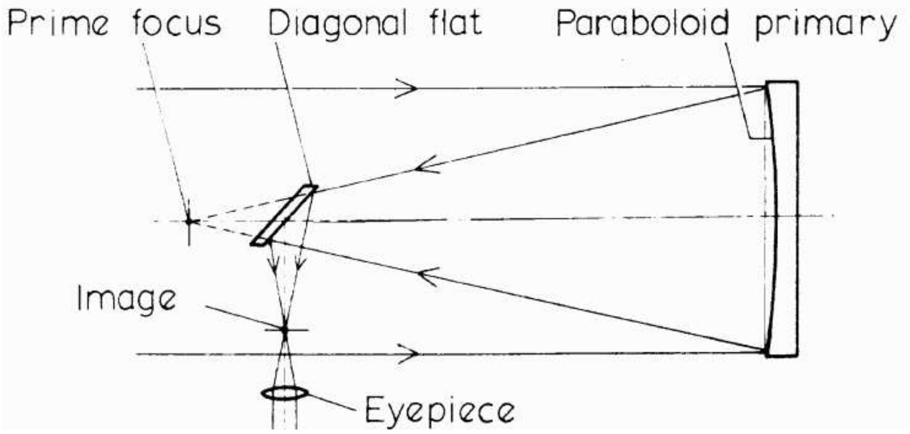

Figure 23: Prime and Newtonian foci.

Prime focus observing used to require an observers "cage" and so was suitable for only the largest telescopes. With increasing automatic and remote control, this is no longer true.

Newtonian focus was popular (and still is) for amateur instruments, but was less convenient for large instruments because of the asymmetry of the arrangement. Again with increasing remote access (for example, fibre optics) this is no longer true.

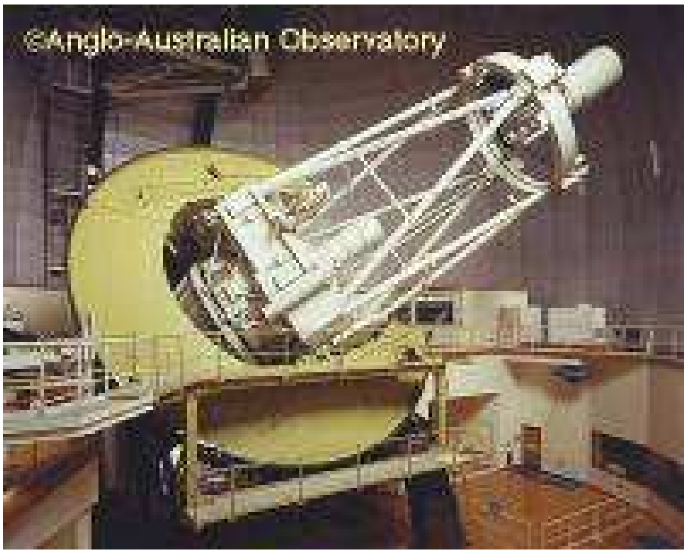

Figure 24: The Anglo-Australian 3.9m Telescope (AAT).

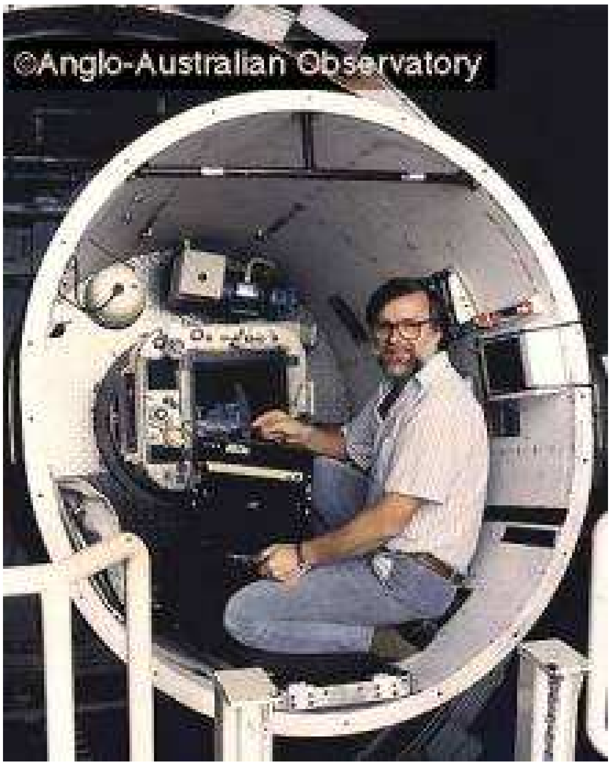

Figure 25: The prime focus “cage” of the Anglo-Australian Telescope.

### 4.3 Gregorian reflector

The **Gregorian reflector** is a variant on the Newtonian reflector devised by James Gregory. It has never really been popular because the long focal length – due to the **secondary mirror** being outside prime focus – requires a long telescope tube (with potential flexure problems) and therefore a relatively large dome.

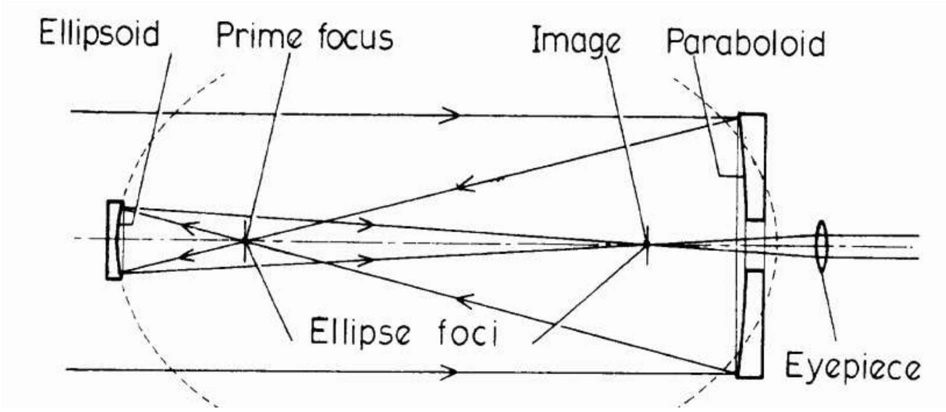

Figure 26: The Gregorian reflector.

### 4.4 Cassegrain reflector

The **Cassegrain** variant, with the secondary mirror inside prime focus, has a much shorter length and has been a popular configuration for decades. Typically f-ratios are f/12 to f/20.

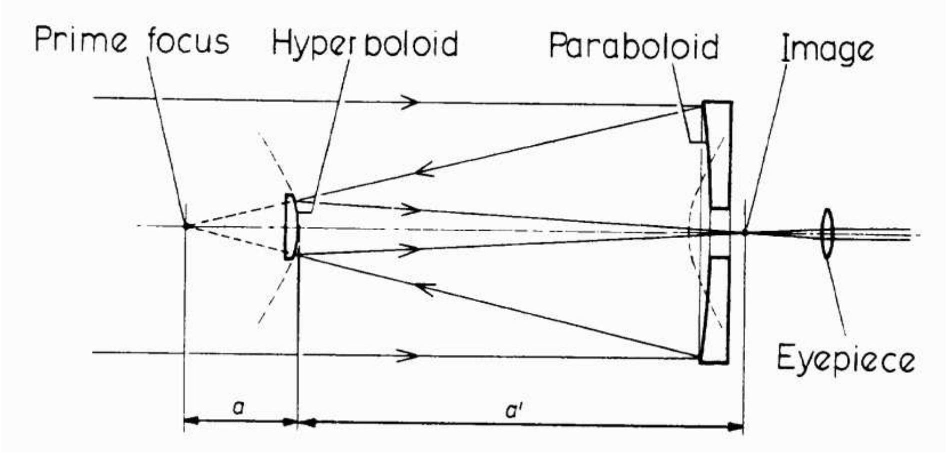

Figure 27: The Cassegrain reflector.

(Note that in modern telescopes, some kind of electronic detector will generally be in the focal plane, rather than an eyepiece !)

Variants on the Cassegrain system include:

- **The Dall–Kirkham**, which has a concave ellipsoidal primary and a convex spherical secondary. The figuring is easier with only one **aspheric** mirror, tending to give a better *on-axis* performance, but *off-axis* coma is about three times worse than a straight Cassegrain configuration.

- **The Ritchey-Chrétien**, which has a hyperboloidal primary and a secondary which deviates from a conic section such that the coma and spherical aberration are corrected at the Cassegrain focus (such systems are called "**aplanatic**"). Ritchey-Chrétien configurations are very popular where (wide-field) imaging is required – obviously because of the good aberration characteristics. They are also compact systems.

### 4.5 Schmidt camera

Bernhard Schmidt's (1930) telescope, often called a **Schmidt camera** has a spherical primary (no coma) with a corrector plate at the centre of curvature of the primary to correct the spherical aberration.

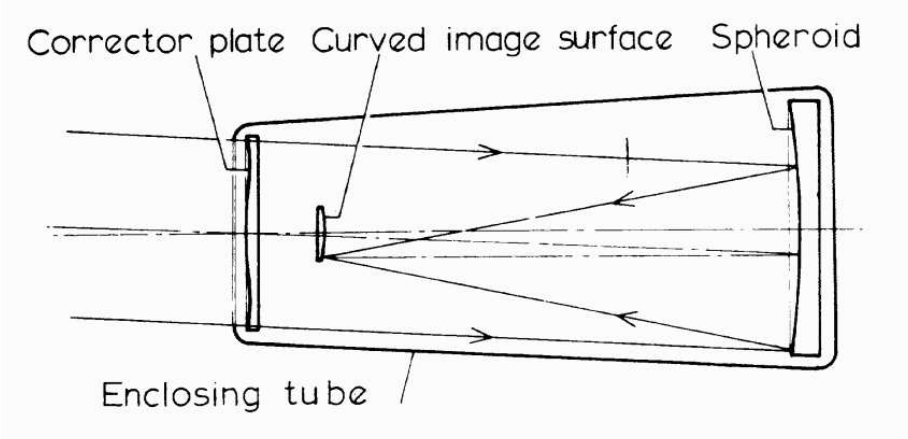

Figure 28: The Schmidt camera.

The Schmidt camera combines the advantage of relatively aberration-free images with a wide field-of-view, in astronomical terms. The SAAO 1m telescope has a field-of-view of a few arcminutes, whereas a Schmidt with comparable aperture (such as the ESO, Palomar or AAO 1.2m Schmidts) will typically have around a 5° × 5° usable field.

The focal plane of a Schmidt is curved, so detectors need to be curved to fit this plane. In the past, photographic plates were the typical Schmidt detector, and these would be mounted on a former to bend them to the shape of the focal plane.

Schmidts are usually fast – f/2 to f/2.5. "Super Schmidts" can be as fast as f/0.8 with fields of 7° or 8° square.

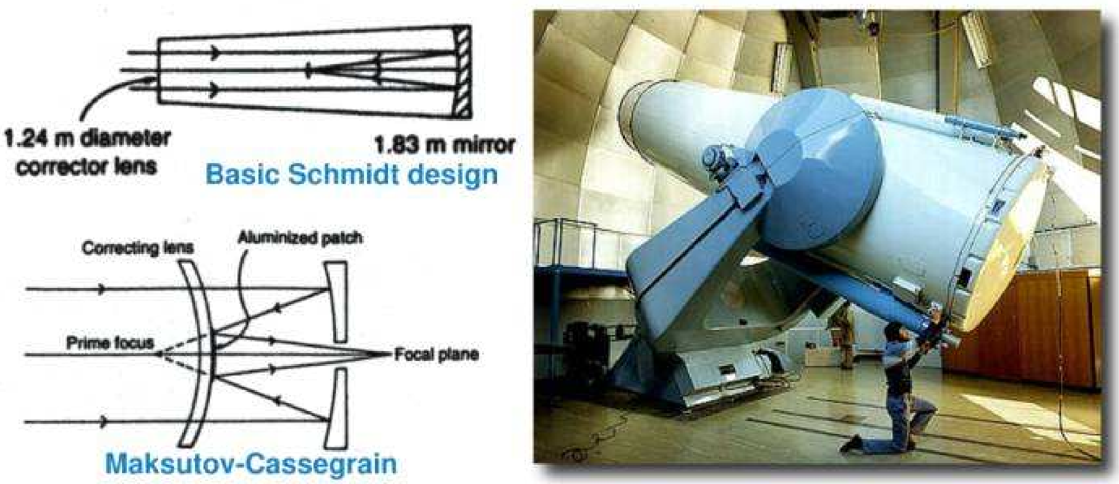

Figure 29: Schematics for Schmidt and Maksutov reflectors (left) and a photo of the Anglo-Australian Schmidt telescope (right).

## 4.6 Maksutov

**Maksutov** telescopes are very compact, wide-field systems with a fast primary and all surfaces spheroidal. A well-designed Maksutov is virtually free from coma, spherical aberration and astigmatism, but the catadioptric nature sets a limit on the size.

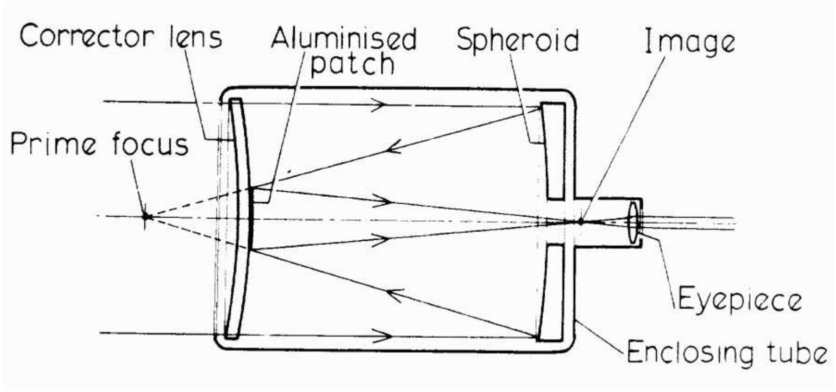

Figure 30: The Maksutov telescope.

## 4.7 Coudé focus

**Coudé** is French for “elbow”. Two flats bend the light beam at 90° to the optical axis usually down the declination axis and then through another 90° down the polar axis. The advantage of this is that heavy or bulky equipment can be installed in a controlled environment for stability (mechanical, thermal or electrical). The long focal length usually means that such systems are slow (typically ∼ f/35, but have a good scale.

The Coudé focus is being used less now that good optical fibres are readily available.

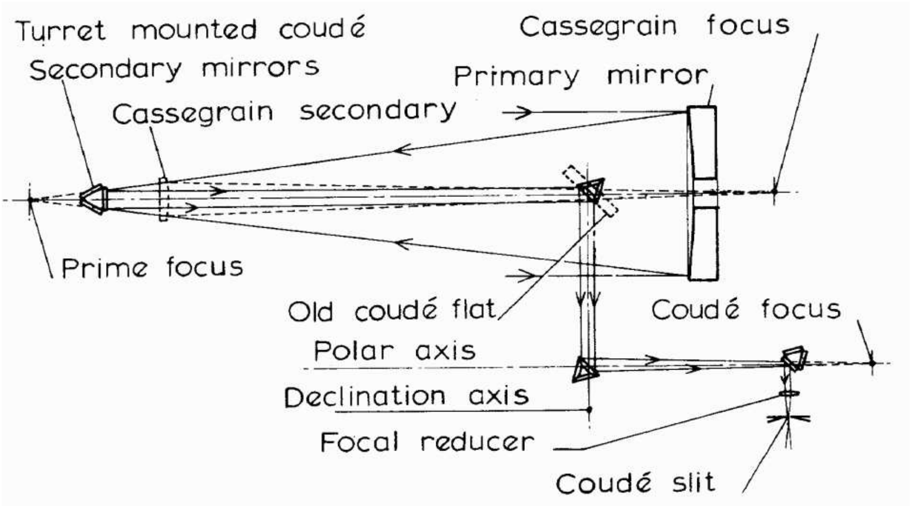

Figure 31: Schematic of the Coudé focus.

### 4.8 Nasmyth focus

The **Nasmyth focus** uses a single flat to send light down one axis of rotation. Use of this focus is common on alt-az mountings. With a flat which can rotate through 180°, two Nasmyth foci can be used, one on each side of the telescope. A minor disadvantage is that the field rotates, but this can be corrected by rotating the detector at the same rate.

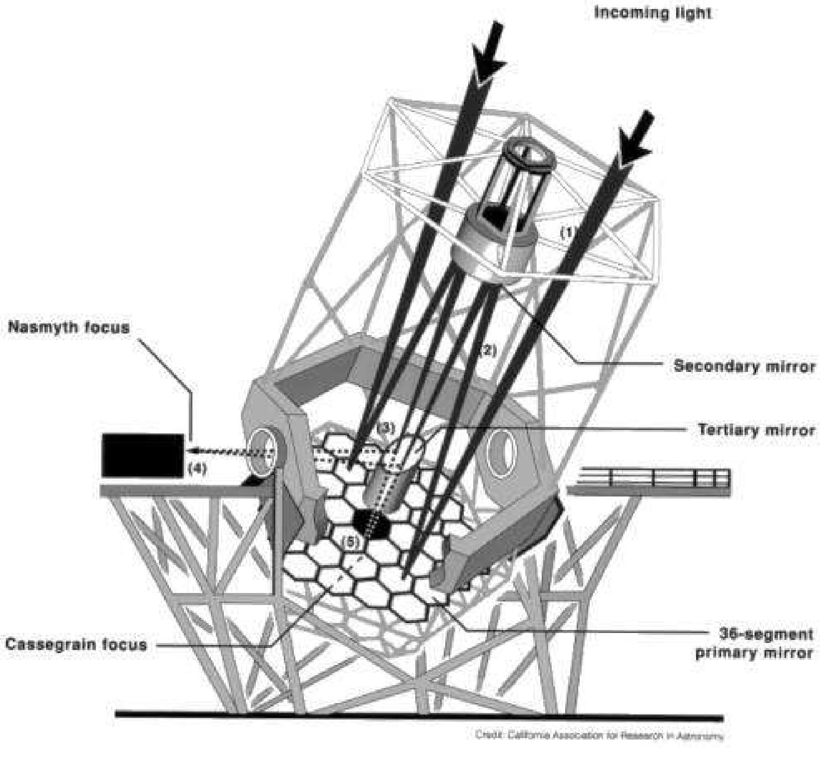

Figure 32: Schematic of the Keck 10m telescope showing the Nasmyth focus.

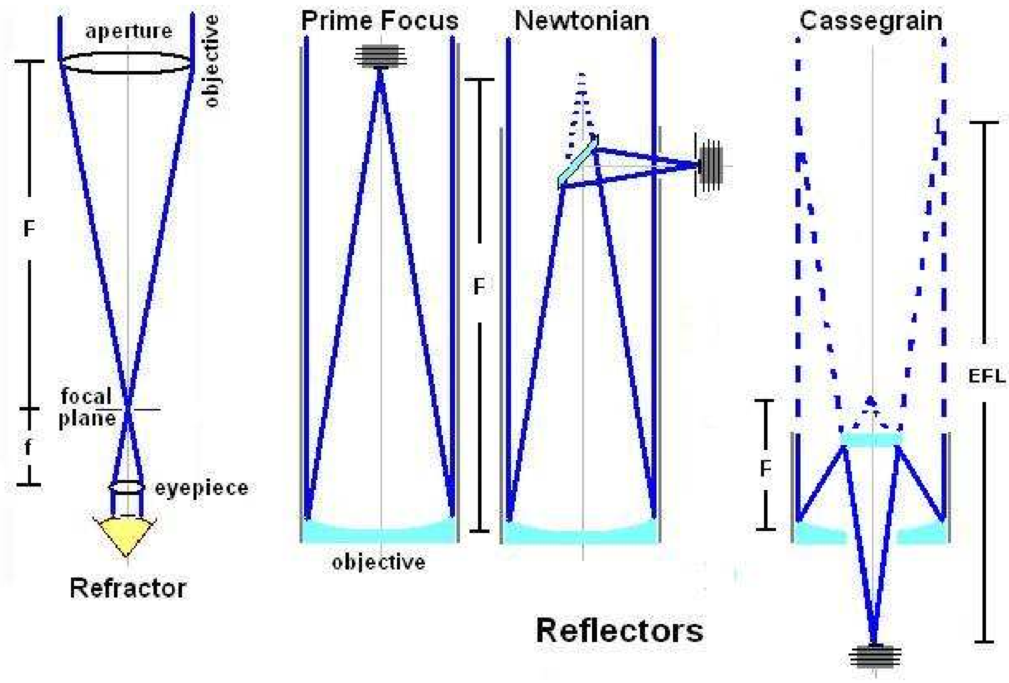

Figure 33:

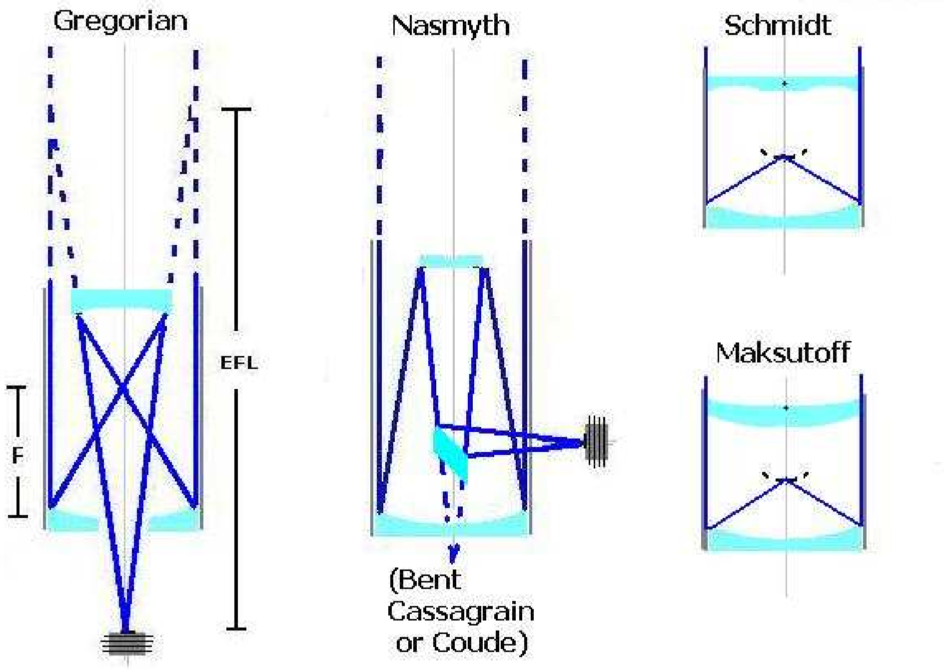

Figure 34: Summary of reflecting telesecope configurations.

Of course, different configurations can exist in the same telescope structure. A telescope might be used at prime focus, at Cassegrain focus (with the insertion of a secondary mirror), or at Coudé or Nasmyth foci (with the insertion of suitable tertiary mirrors). This has the advantage that different instruments can be left permanently on the telescope with the various mirrors being used to select the desired instrument.

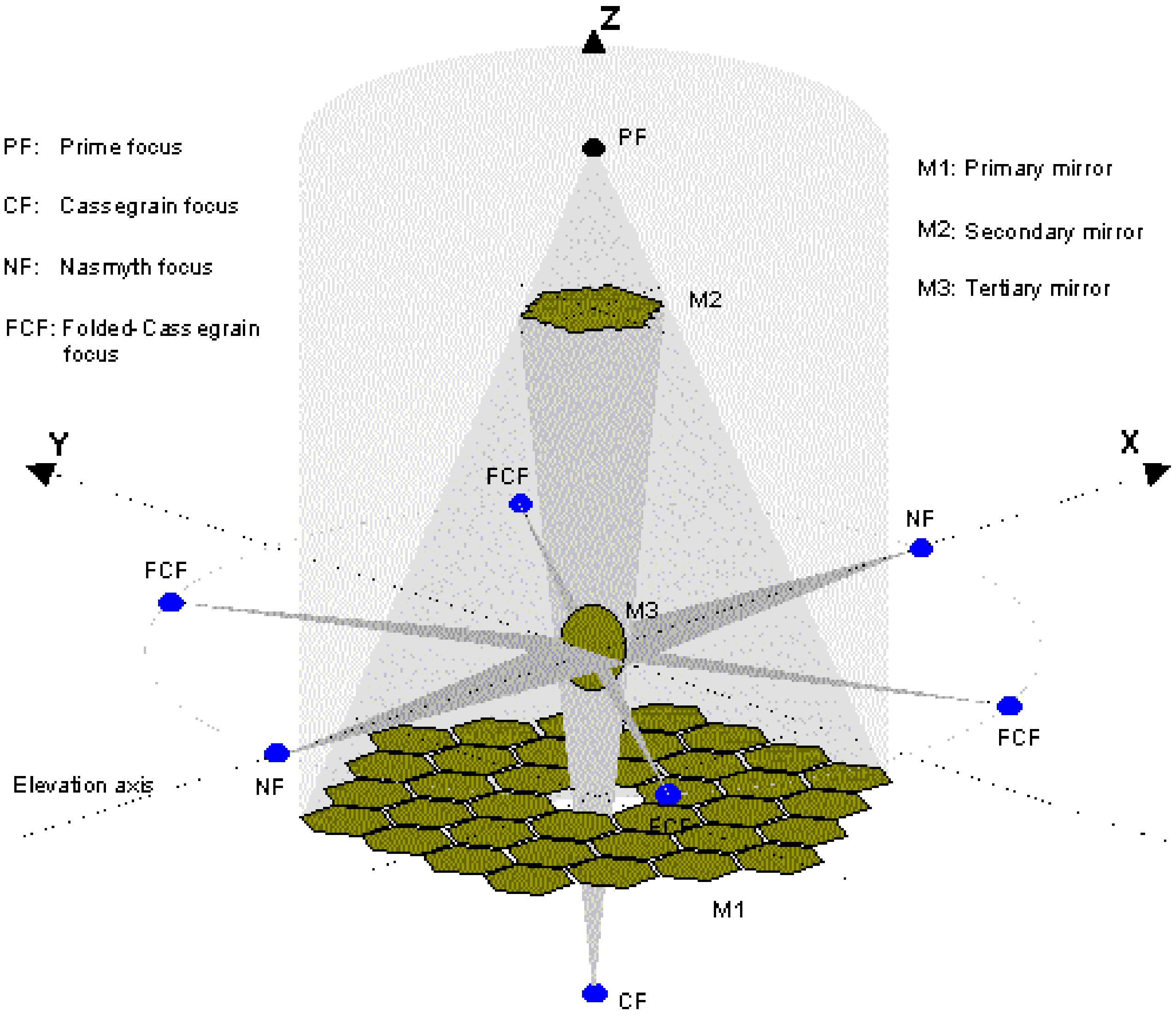

Figure 35: Schematic of possible Keck configurations.

# 5 Telescope mounts

There are two main types of telescope mount – **equatorial** and **altitude-azimuth ("alt-az")** – with many variations.

## 5.1 Equatorial

This type of mount has been popular, almost universal, since telescopes achieved any sort of useful size. As we have seen, the equatorial system of co-ordinates ($\alpha$, $\delta$) is based on the rotation of the Earth. A telescope with one axis aligned with the polar axis only needs to be driven around this axis at the sidereal rate to track astronomical objects.

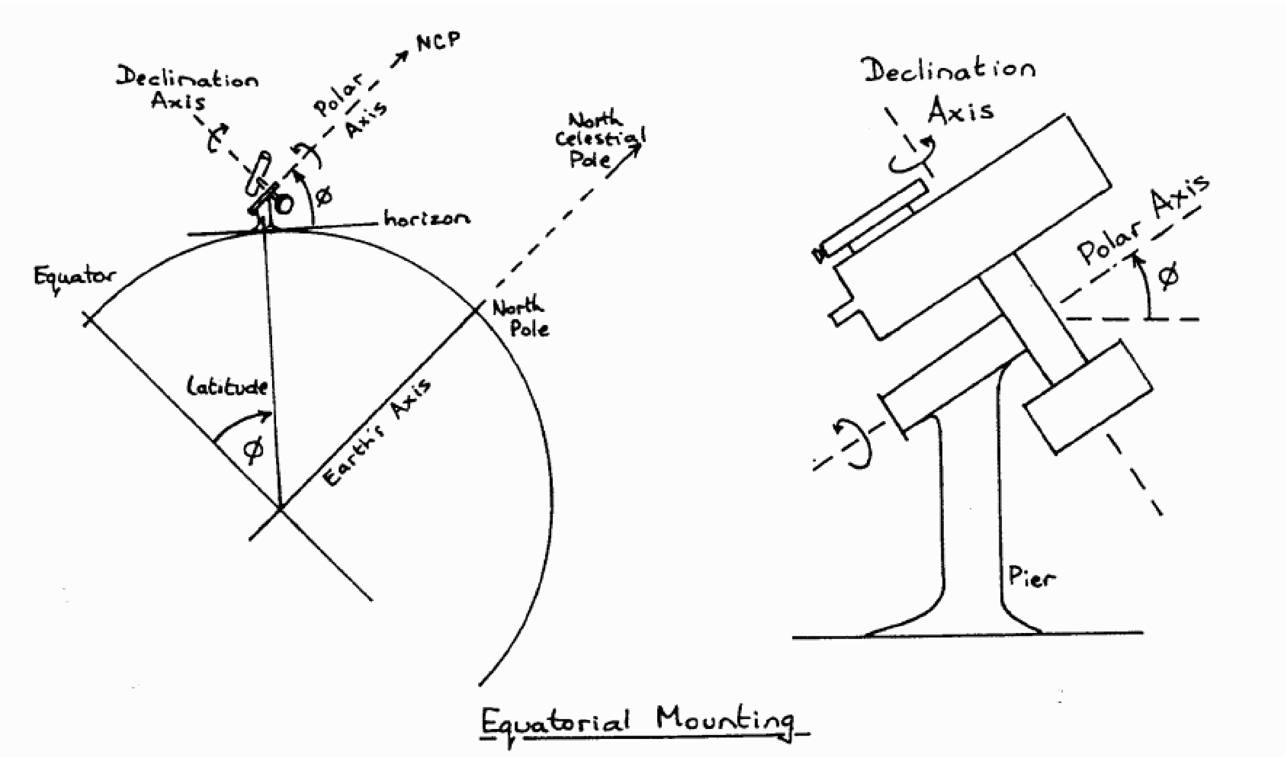

Figure 36: Equatorial mounts.

With **sidereal time**, we know where the zero-point of the system is, and can easily locate objects at a given ($\alpha$, $\delta$) position. Some examples of equatorial mounts are given in the figures.

- The **fork** gives excellent sky access but is somewhat limited by flexure effects for high load-bearing. More suitable for smaller telescopes than larger. This type of mount can be made very fast (e.g. "YSTAR" – The Yonsei Survey Telescope for Astronomical Research.)
- The **yoke** is better for load-bearing but obstructs access to the polar region.
- The **horseshoe** is very strong and gives polar access.
- The **polar disk** is very rigid for a given size.

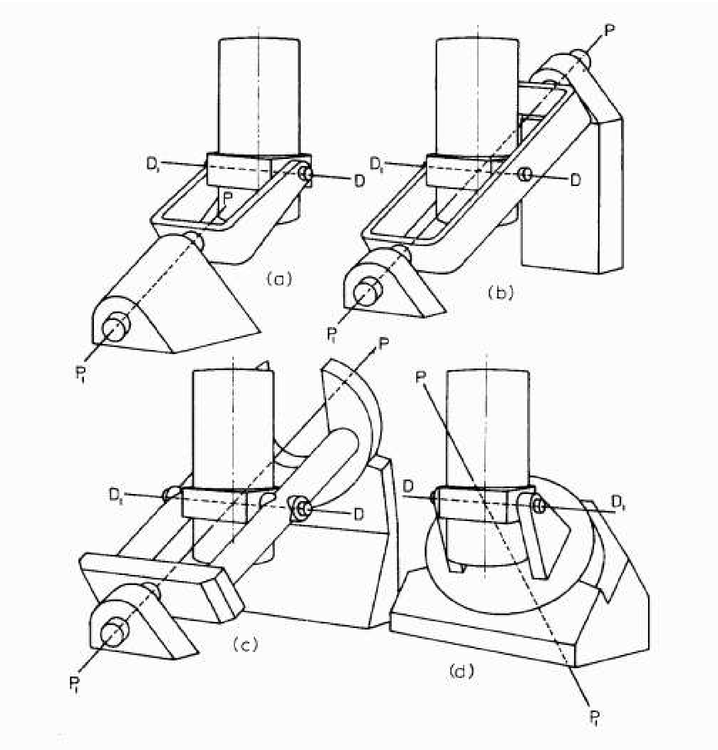

Figure 37: Equatorial mounts: (a) Fork, (b) Yoke (also “English” mount), (c) Horseshoe (d) Polar disk.

Figure 38: Fork mount telescope. See also the picture of the Anglo-Australian Schmidt telescope in section 4.5

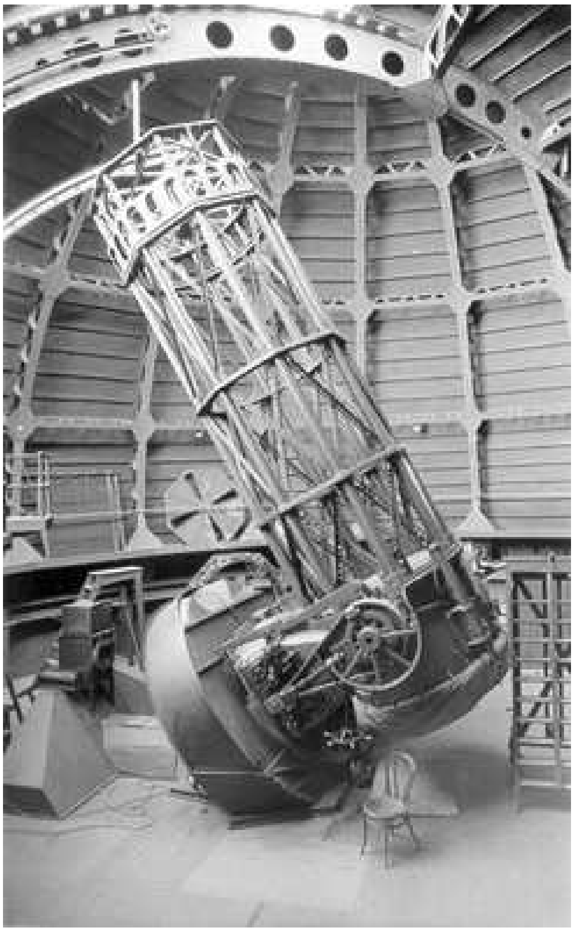

Figure 39: Mt Wilson Observatory 60-inch (1.5m) telescope. (Polar disc mount).

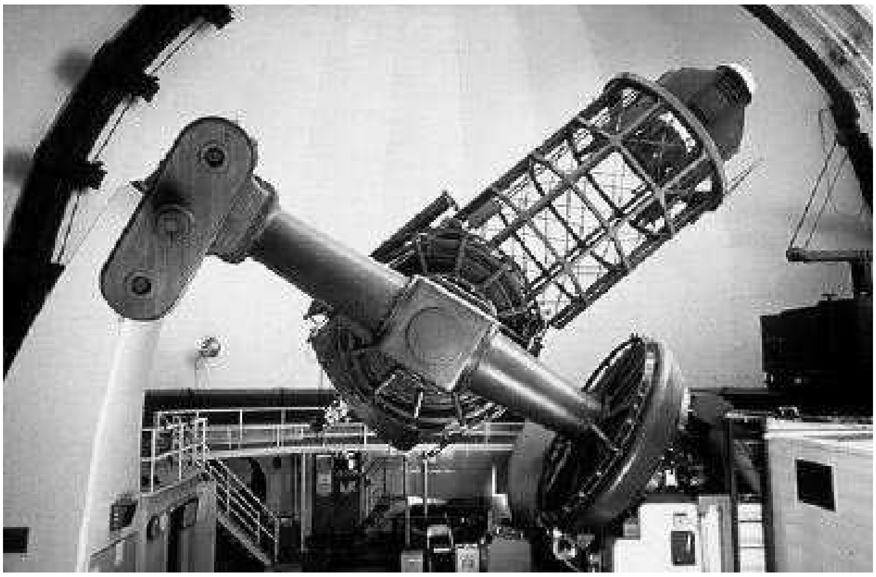

Figure 40: McDonald Observatory 82-inch (2m) telescope.

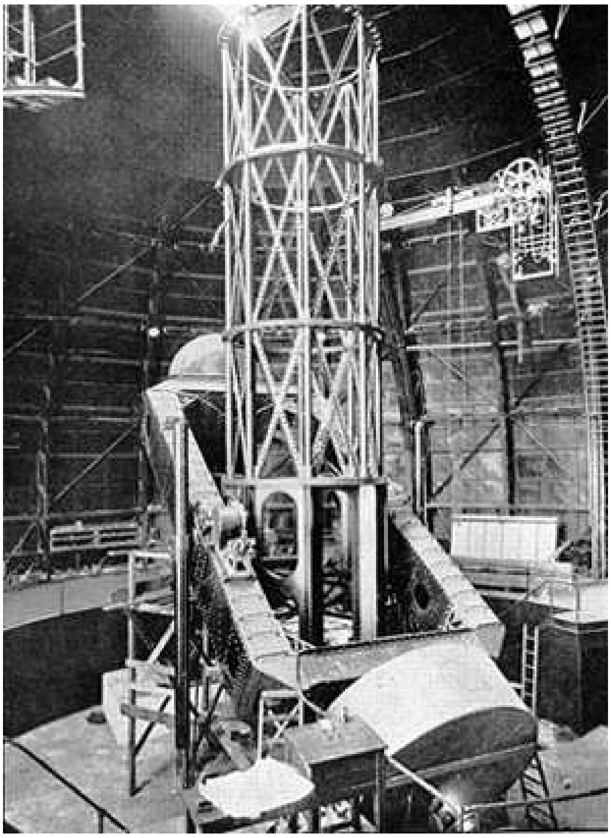

Figure 41: Mt Wilson Observatory 100-inch (2.5m) telescope (Yoke mount).

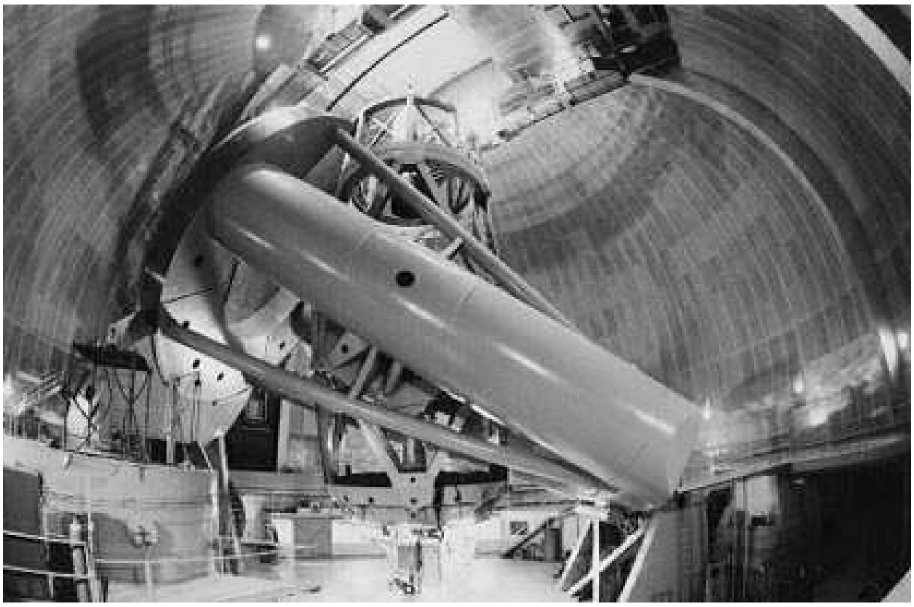

Figure 42: Mt Palomar Observatory 200-inch (5m) telescope. Horseshoe mount – see also the picture of the Anglo-Australian 3.9m telescope in section 4.2.

## 5.2 Alt-az

In the last couple of decades, telescope apertures have significantly exceeded the size of the long-standing record-holder, the 200-inch (5m) Palomar "Hale" telescope (operational in the late 1940s) and the Russian 6m telescope (operational in the early 1970s, but with many problems). This generally means much bigger and heavier structures and that the altitude-azimuth (or "alt-az") mount is much more suitable.

As we have seen, use of an alt-az system means that the instantaneous altitude and azimuth of a star must be calculated from the RA, Dec and local sidereal time – and this must be done very rapidly and very frequently if the telescope is to track a celestial object smoothly and accurately, because – unlike RA in the equatorial system – the rates of change of altitude and azimuth will not generally be constant. The increasing speed and power of computers in the last ∼ three decades has made this practicable.

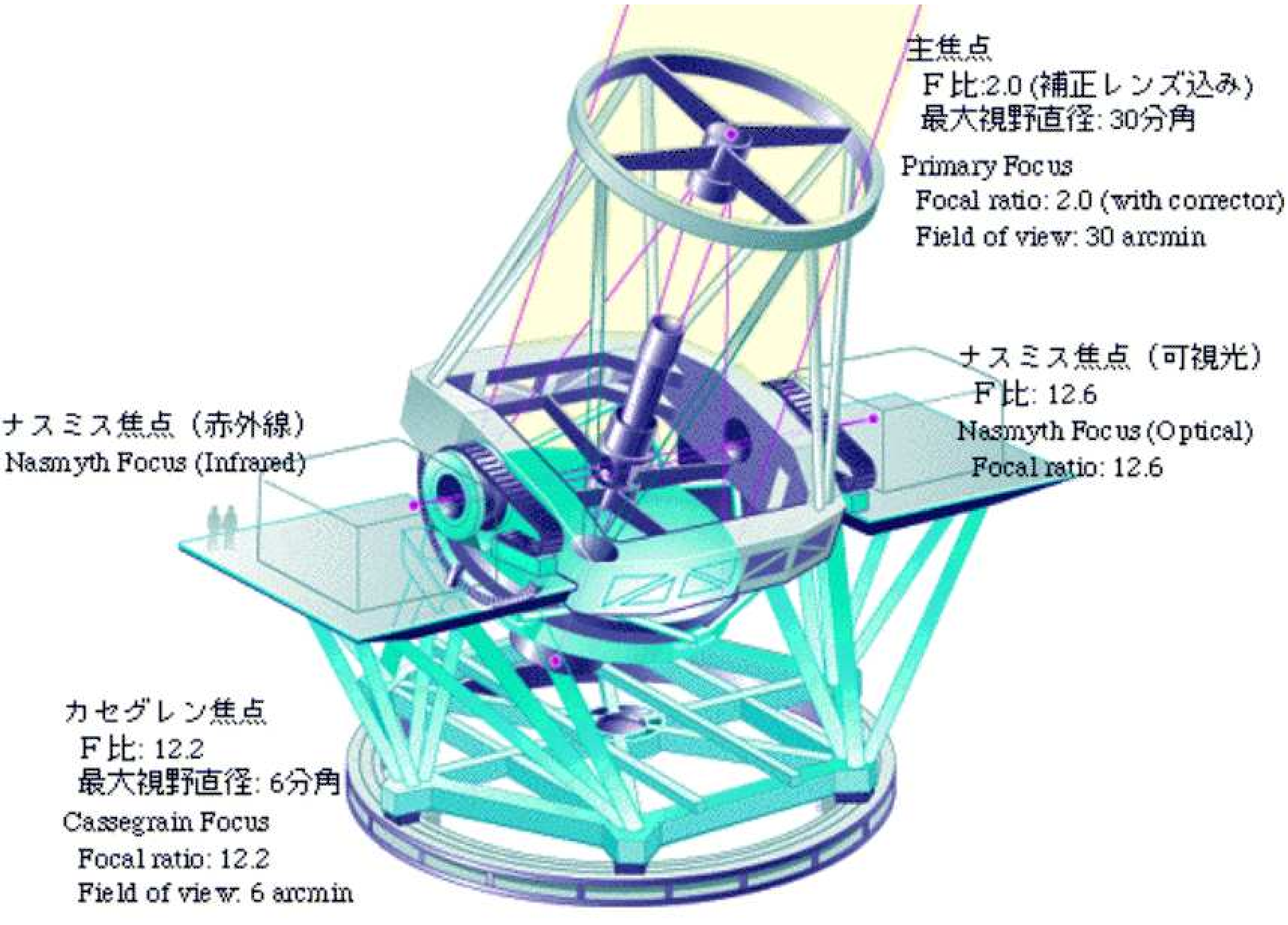

遠藤孝悦・画　日経サイエンス1996年2月号より
Illustration by Takaetsu Endo, taken from Nikkei Science 1996

Figure 43: Schematic of the Japanese "Subaru" alt-az telescope on Mauna Kea. See also the schematic of the Keck telescope in section 4.8.

In engineering terms, the alt-az mount is pretty much essential for the current generation of large (∼ 10m) telescopes. It is superior to equatorial mounts because, amongst other mechanical advantages, the vertical loading is constant and symmetrical, azimuth rotation causes no loading change or deflection, and the telescope tube flexure is in one plane, dependent only on zenith angle.

There are a couple of (minor) drawbacks to alt-az telescopes:

- The necessity for continuous rapid calculation of altitude and azimuth. This has been solved by the power of modern computers – so not really a problem at all.
- We have seen that the relationship between horizontal and equatorial co-ordinates can be expressed by two equations such as:

$$\mathbf{sin\ a} = \mathbf{sin}\ \delta\ \mathbf{sin}\ \phi + \mathbf{cos}\ \delta\ \mathbf{cos}\ \phi\ \mathbf{cos\ H}$$

  and

$$\mathbf{sin\ A} = -\frac{\mathbf{sin\ H\ cos}\ \delta}{\mathbf{cos\ a}}$$

  Note that, in the second equation, if the altitude ($a$) approaches 90°, the azimuth ($A$) approaches infinity. What this means, of course, is that for an object which passes through the zenith, as it does so, its azimuth jumps instantaneously from 90° East to 90° West (or from 90° to 270°). In practice, it means that for objects near the zenith, it is very difficult to transform quickly enough and accurately enough from equatorial to horizontal co-ordinates and a small patch of sky near the zenith is effectively inaccessible, even though the telescope can easily point there. Simple observing programme planning should avoid problems from this source.

## 6 The Largest Telescopes

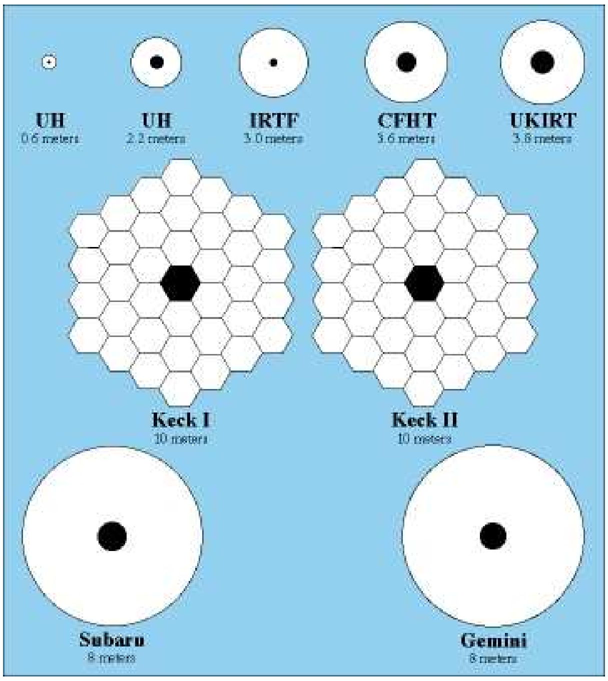

Figure 44: Schematic of the larger telescope mirrors on Mauna Kea, Hawaii.

Table 2: The largest operational optical telescopes

| Telescope | Aperture (m) | Location | Altitude (m) | Comments |
|---|---|---|---|---|
| Keck I | 10.0 | Mauna Kea, Hawaii | 4123 | 36 mirror segments |
| Keck II | 10.0 | Mauna Kea, Hawaii | 4123 | 36 mirror segments |
| Hobby-Eberly | ∼9.2 | Mt Fowlkes, Texas | 2072 | 91 mirror segments |
| Subaru | 8.3 | Mauna Kea, Hawaii | 4100 | |
| Antu | 8.2 | Cerro Paranal, Chile | 2635 | VLT |
| Kueyen | 8.2 | Cerro Paranal, Chile | 2635 | VLT |
| Melipal | 8.2 | Cerro Paranal, Chile | 2635 | VLT |
| Yepun | 8.2 | Cerro Paranal, Chile | 2635 | VLT |
| Gemini (North) | 8.1 | Mauna Kea, Hawaii | 4100 | Gillett telescope |
| Gemini (South) | 8.1 | Cerro Pachon, Chile | 2737 | |
| Multi-Mirror | 6.5 | Mt Hopkins, Arizona | 2600 | MMT |
| Magellan I | 6.5 | Las Campanas, Chile | 2282 | Walter Baade telescope |
| Magellan II | 6.5 | Las Campanas, Chile | 2282 | Landon Clay telescope |
| Bolshoi | 6.0 | Nizhny Arkhyz., Russia | 2070 | Large Alt-az telescope |
| Hale | 5.0 | Mt Palomar, California | 1900 | "200-inch" |

Table 3: Large optical telescopes under construction.

| Telescope | Aperture (m) | Location | Comments |
|---|---|---|---|
| Large Binocular telescope | 11.8 | Mt Graham, Arizona | 2 x 8.4m |
| Gran Telescopio Canarias | 10.4 | La Palma, Spain | Keck based |
| SALT | 9.2 | Sutherland, South Africa | HET based |
| LZT | 6.0 | B.C., Canada | Liquid mirror |

Table 4: Extremely large telescope studies.

| Telescope | Aperture (m) | Comments |
|---|---|---|
| OWL | 100 | Overwhelmingly Large Telescope |
| Euro50 | 50 | |
| MaxAT | 30 – 50 | |
| CELT | 30 | Californian Extremely Large Telescope |
| XLT | 30 | |
| GSMT | 30 | Giant Segmented Mirror Telescope |

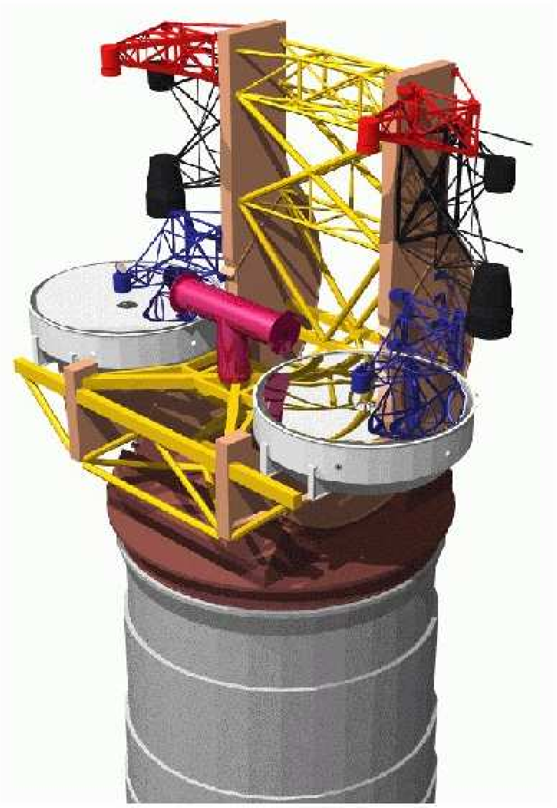

Figure 45: Schematic of the Large Binocular Telescope.

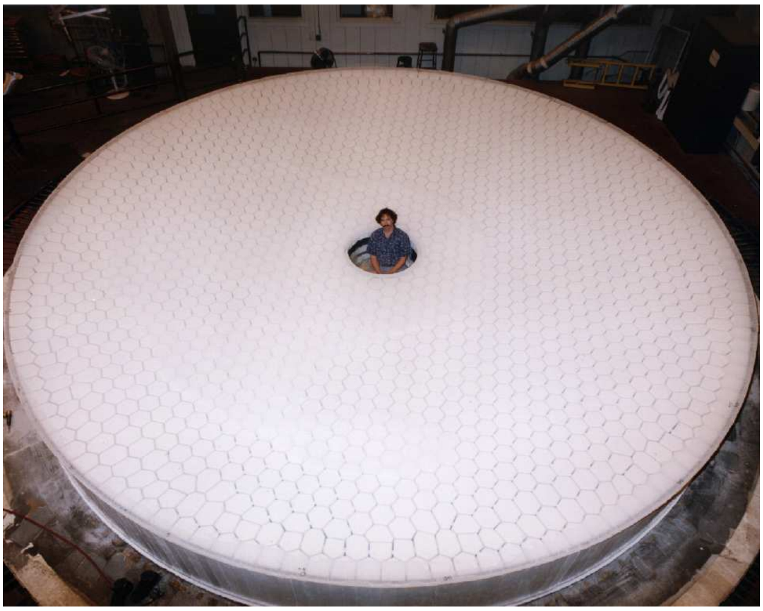

Figure 46: One of the mirrors for the Large Binocular Telescope.